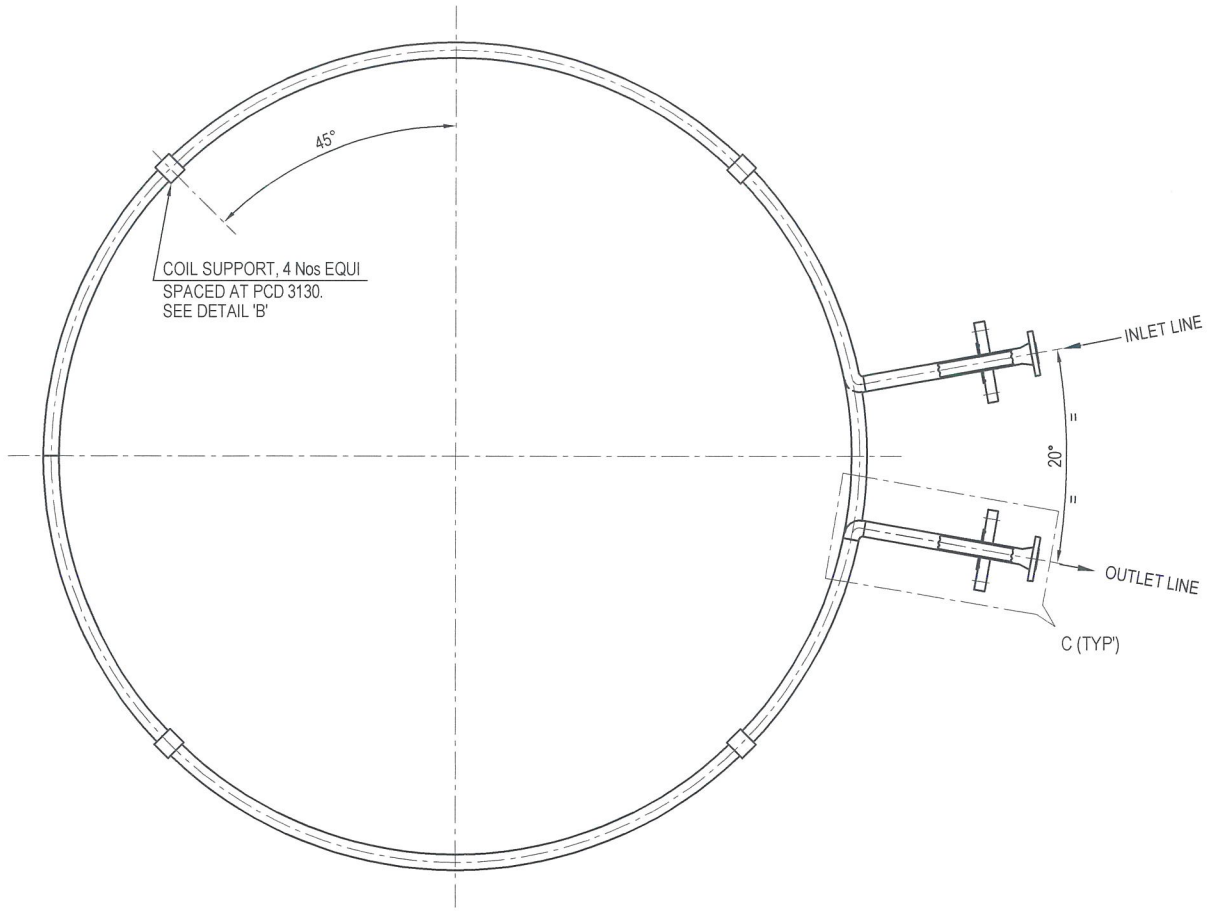

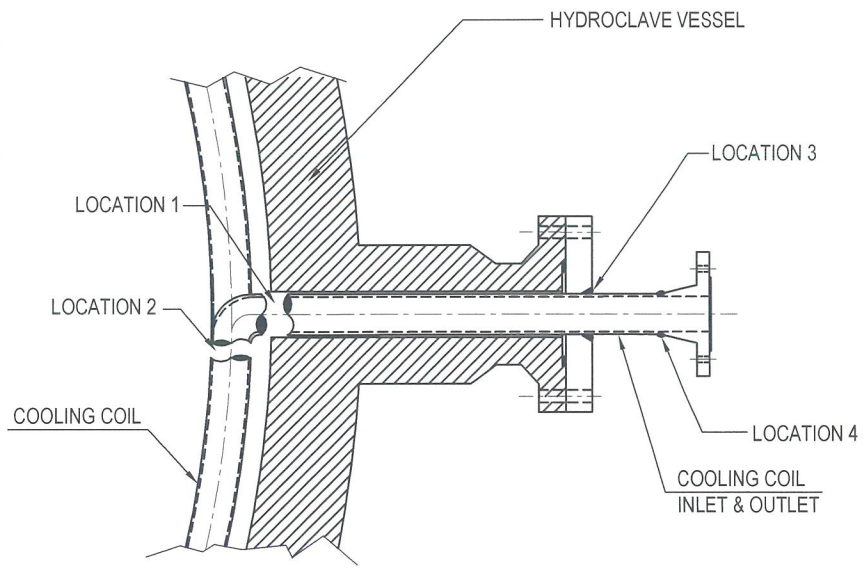

WELDING DETAILS
PART C TO VESSEL
TYPICAL AT 6 Nos

ISOMETRIC VIEW

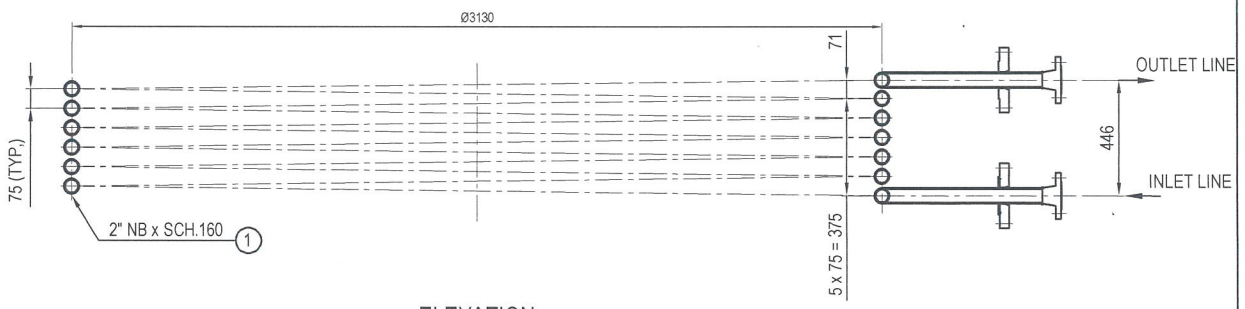

ELEVATION

NOTE:-
1. ALL SHARP CORNERS SHALL BE ROUNDED OFF TO SUITABLE RADIUS.
2. ALL DIMENSIONS ARE IN mm UNLESS OTHERWISE SPECIFIED..
3. THE FOLLOWING WELDING SHALL BE DONE AT THE TIME OF ASSEMBLY.
   1. DETAIL - B - COIL SUPPORTING PLATES WELDING.
   2. PART - 3 - FLANGE LOCATION 3 WELDING.
   3. PART - 5 - ELBOW LOCATION 1 & LOCATION 2 WELDING.
4. PART - 3 - FLANGE THICKENESS IS 38 MM (MINIMUM) A TOUNG SHALL BE MACHINED AT SITE ON FLANGE FACE TO SUIT THE HYDROCLAVE FLANGE.

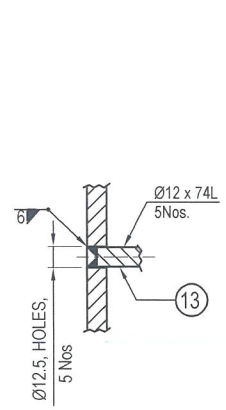

DETAIL- B1

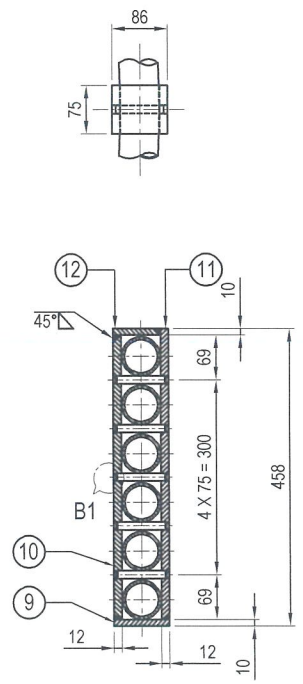

DETAIL- B

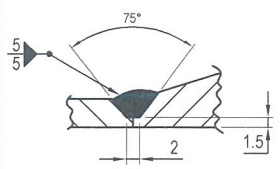

DETAIL- W1

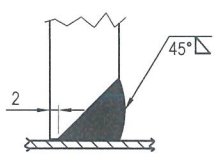

DETAIL- W2

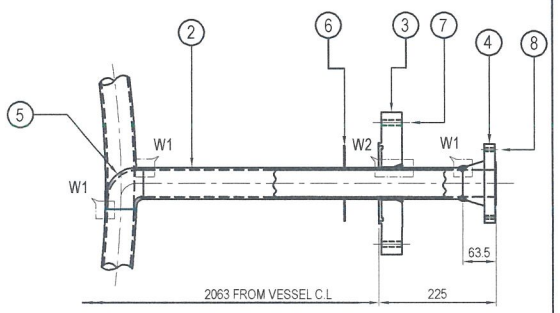

DETAIL- C

ITEM NO.	DESCRIPTION	MATERIAL	QTY.	WT.	REMARKS
13	COIL SUPPORT ROD	IS:2062 Gr.A	20		Ø12 x 74mm L
12	COIL SUPPORT -4	SA516 Gr.70	4		74 x 75 x 10mm THK
11	COIL SUPPORT -3	SA516 Gr.70	4		448 x 75 x 12mm THK
10	COIL SUPPORT PLATE -2	SA516 Gr.70	4		438 x 75 x 12mm THK
9	COIL SUPPORT PLATE -1	SA516 Gr.70	4		86 x 75 x 10mm THK
8	STUD + 2 NUTS	SA194 Gr.2H	8		M16 x 2 PITCH x 160mm L
7	STUD + 2 NUTS	SA194 Gr.2H	16		M24 x 3 PITCH x 160mm L
6	GASKET	CAF	2		144.5 OD x 132 ID x 2mmTHK
5	ELBOW	SA 234 Gr.WPB	2		2" NB SCH.160 x 90°SR
4	FLANGE	SA 105	2		2" NB ASME 150/.W.N.R.F SCH.160
3	BLIND FLANGE (SEE NOTE 4)	SA 105	2		4" ASME BLD RF 600 CLASS.
2	PIPE	SA106 Gr.B	2		2" NB SCH.160 x 608mm L
1	COIL PIPE	SA106 Gr.B	1		2" NB SCH.160 x 59000mm L

DO NOT SCALE THE DRAWING
ASK IF IN DOUBT
UNLESS OTHERWISE SHOWN:–
ALL DIMENSIONS IN MILLIMETERS
REMOVE SHARP EDGES AND BURRS
CHAMFER 1mm x 45°

MACHINING FINISH IN MICRONS:–
▽ 8–25 ▽▽ 1.6–8
▽▽▽ 0.025–1.6 ▽▽▽▽ <0.025

DEVIATION FOR NONTOLERANCED DIMENSIONS (IS: 2102–MEDIUM GRADE)

DIAMETER & LENGTH UPTO &INCL. 6±0.1	LENGTH IN mm OF SHORTER SIDE OF ANGLE UPTO & INCL.
6 – 30±0.2	1 – 6±1°.00'
30 – 120±0.3	6 – 30±0°30'
120 – 315±0.5	30 –120±0°20'
315 – 1000±0.8	120 –400±0°10'
1000 – 2000±1.2	
2000 – 4000±2.0	
4000 & ABOVE ±3.0	

REV.NO.	ZONE	DESCRIPTION	SIGN	DATE

REVISIONS

ASSEMBLY DRG

MATERIAL

TITLE: COOLING COIL FOR 3M HYDROCLAVE

No.OFF: 6

WT.Kg.

DGN.
DRN.
CHD.
CHD.
APPD.
2024 SIGN. DATE

GOVERNMENT OF INDIA
INDIAN SPACE RESEARCH ORGANISATION
VIKRAM SARABHAI SPACE CENTRE
TRIVANDRUM

UNIT/DIVISION/PROJECT
CMSE / ABSG / APPD

DRG.NO. 260-999-17-70-11-00

SCALE 1 : 20

SHEET 1 OF 2

A2

NOTE:-

1. THIS ASSEMBLY DRAWING IS ONLY FOR REFERENCE.

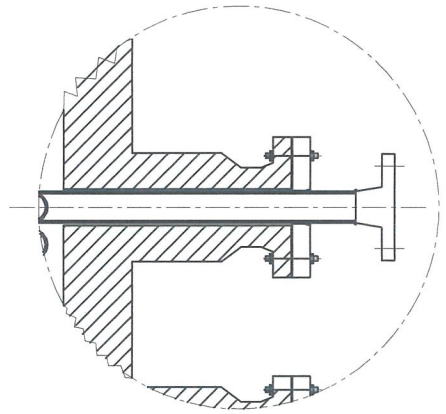

DETAIL - B

VIEW ROTATED BY 90°

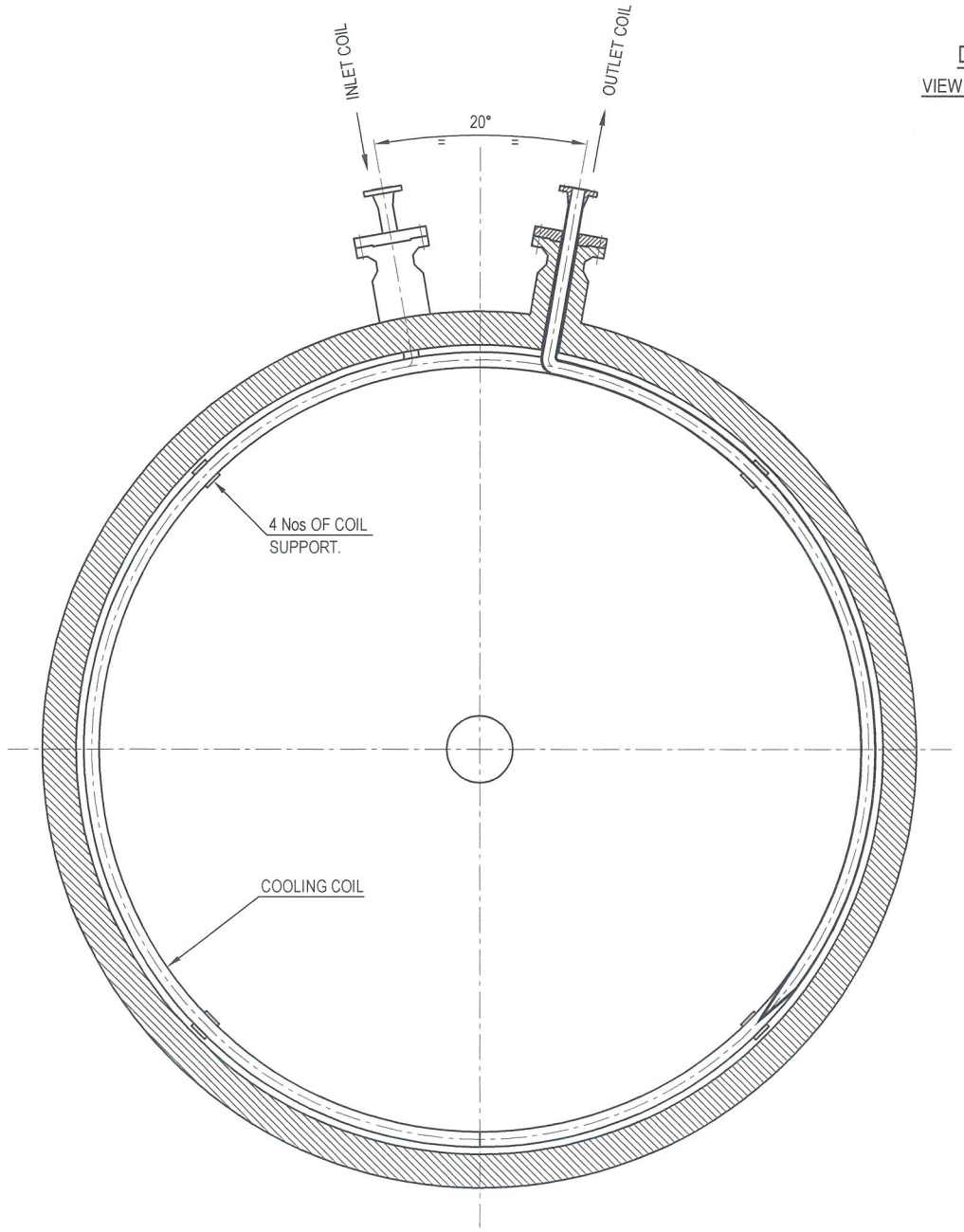

SECTION - AA

COIL SET 1

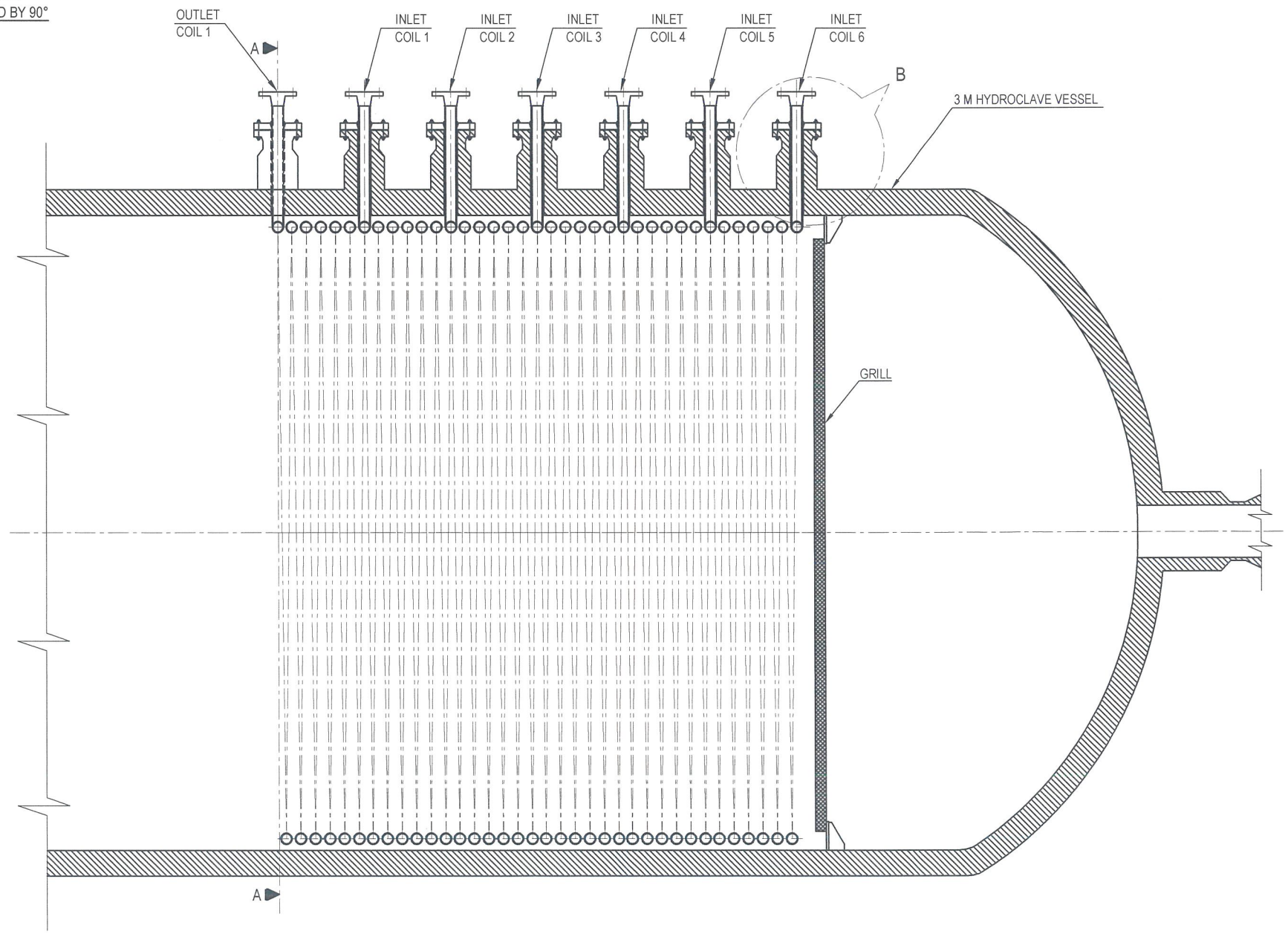

SECTIONAL ELEVATION

ITEM NO.	DESCRIPTION	MATERIAL	QTY.	WT.	REMARKS

DO NOT SCALE THE DRAWING
ASK IF IN DOUBT
UNLESS OTHERWISE SHOWN:–
ALL DIMENSIONS IN MILLIMETERS
REMOVE SHARP EDGES AND BURRS
CHAMFER 1mm x 45°

MACHINING FINISH IN MICRONS:–

▽ 8–25 ▽▽ 1.6–8

▽▽▽ 0.025–1.6 ▽▽▽▽ <0.025

DEVIATION FOR NONTOLERANCED DIMENSIONS (IS: 2102–MEDIUM GRADE)

DIAMETER & LENGTH	
UPTO &INCL.	6±0.1
6 –	30±0.2
30 –	120±0.3
120 –	315±0.5
315 –	1000±0.8
1000 –	2000±1.2
2000 –	4000±2.0
4000 & ABOVE	±3.0

LENGTH IN mm OF SHORTER SIDE OF ANGLE	
UPTO & INCL.	
1 –	6±1°.00'
6 –	30±0°30'
30 –	120±0°20'
120 –	400±0°10'

REV.NO.	ZONE	DESCRIPTION	SIGN	DATE

REVISIONS

ASSEMBLY DRG

MATERIAL

TITLE 3M HYDROCLAVE COOLING COIL ASSEMBLY TO VESSEL.

No.OFF 1

WT.Kg.

DGN. A.

DRN.

CHD.

CHD.

APPD. 07/10

2024 SIGN. DATE

GOVERNMENT OF INDIA
INDIAN SPACE RESEARCH ORGANISATION
VIKRAM SARABHAI SPACE CENTRE
TRIVANDRUM

UNIT/DIVISION/PROJECT

CMSE / ABSG / APPD

DRG.NO. 260-999-17-70-11-00

SCALE 1:20

SHEET 2 OF 2