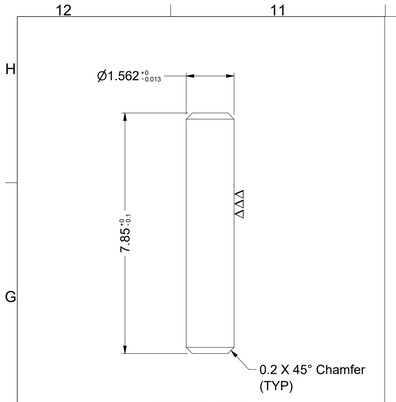

DOWEL PIN
(Refer Note 11)

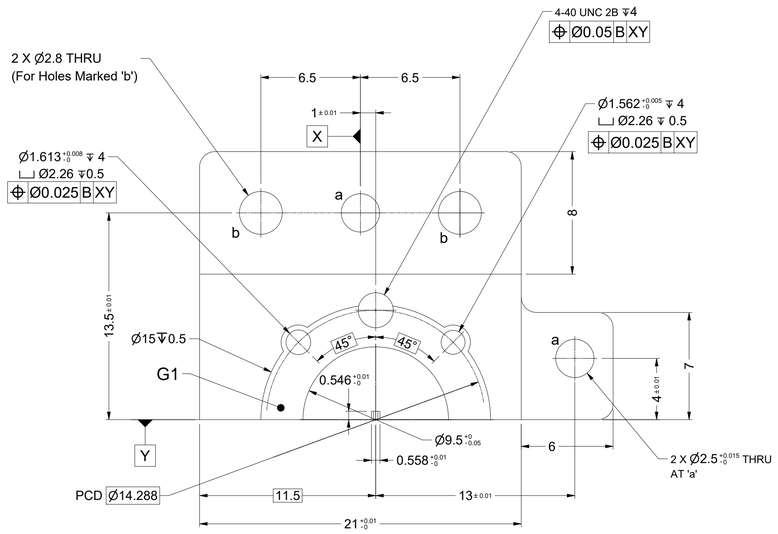

TOP VIEW

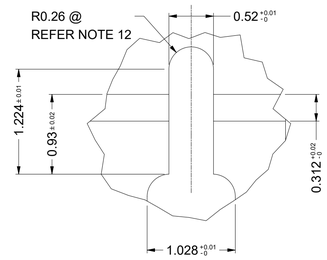

DETAIL 'H'

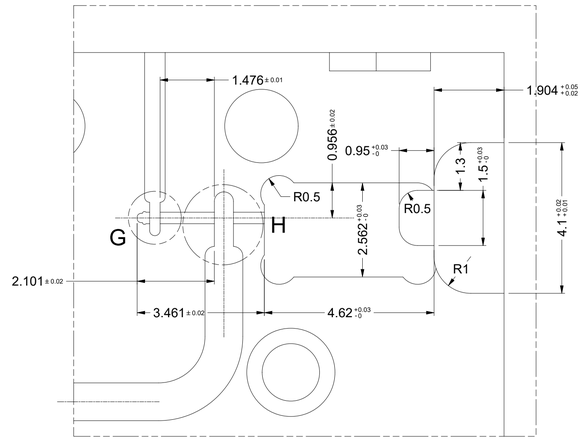

DETAIL 'D'
(Refer Note 13)

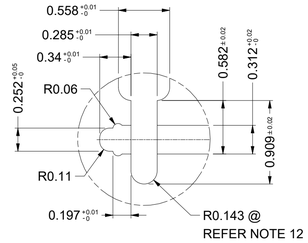

DETAIL 'G'

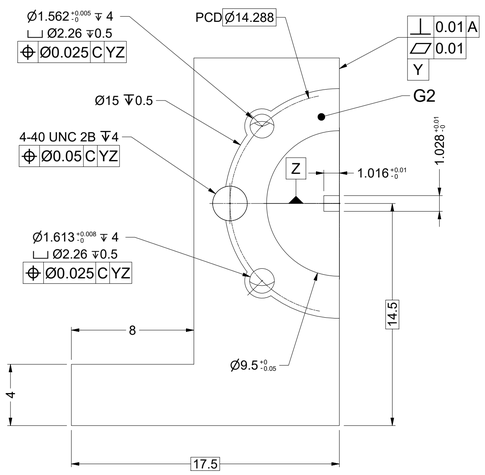

LEFT SIDE VIEW

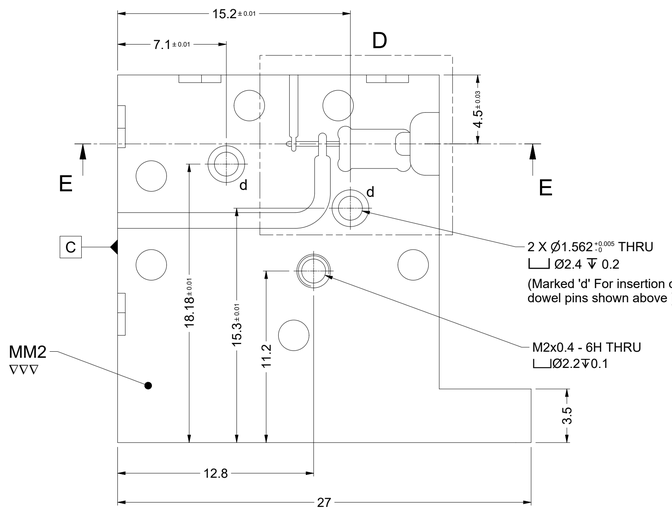

FRONT VIEW

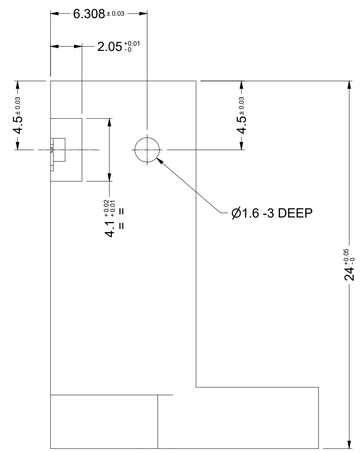

RIGHT SIDE VIEW

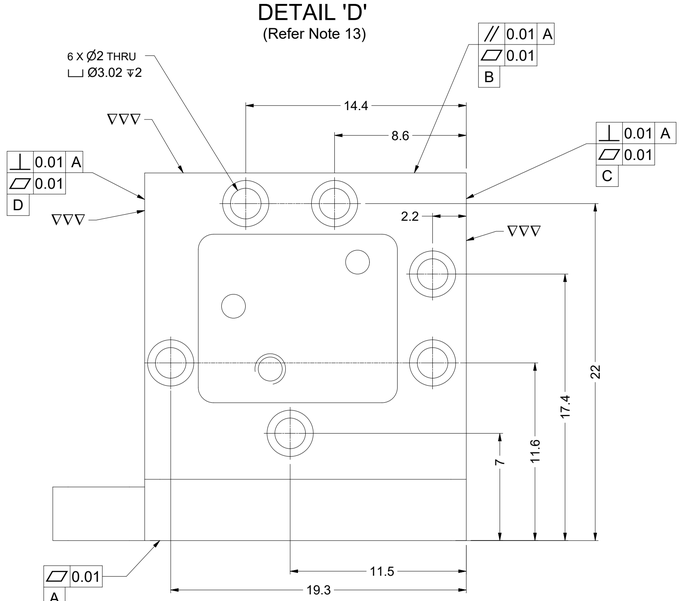

REAR VIEW

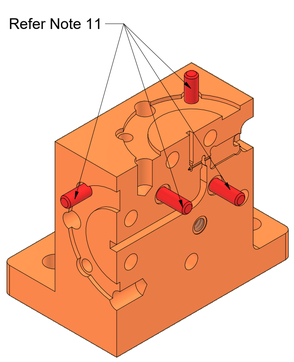

ISOMETRIC VIEW
OF MIXER TOP

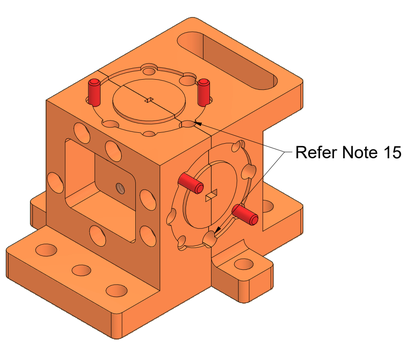

ASSEMBLED VIEW OF FINAL
PRODUCT

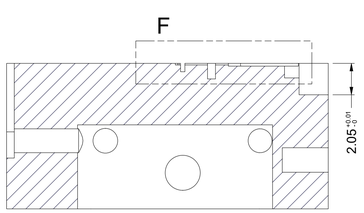

SECTION 'E-E'

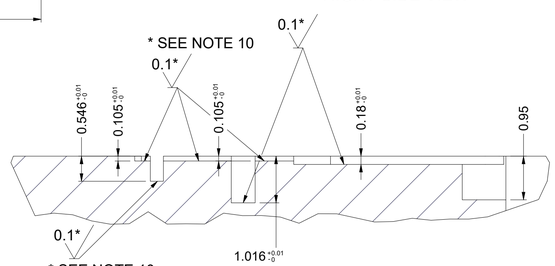

DETAIL 'F'

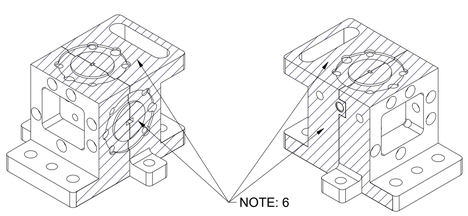

NOTES:
1. For machining, i.e. micro-machining as well as wave guide flange features, on Mixer Top and Bottom common reference is to be used.
2. For taking common reference, provision of dowels are provided.
3. Micro-machinning will be carried out on face shown by MM2.
4. Machining allowance of 0.2mm is given on base, MM2 as well as three faces shown using hatch.
5. First machining at base is to be done and subsequently on MM2.
6. Once machining is completed, both blocks are to be assembled using screws and machining is to be done on base (Shown using datum A) to maintain planarity on mounting face. subsequently a cut of 0.2 mm is to be taken on three faces shown by hatch including G1 & G2 to maintain planarity on faces.
7. Tolerance on all hole locations and hole reference dimensions is ±0.05mm unless specified.
8. To be cleaned and de-burr properly.
9. Flatness for all surfaces & perpendicularity between two orthogonal surfaces is to be maintained within 10 micron-meter unless specified.
10. Surface Finish (Ra) at marked location to be achieved better than 0.1 micron-meter.
11. Dowel pins made of SS304/316 are to be provided.
12. @ Indicates that radius will be same as the cavity dimension.
13. All micro machining features shown in detail D are very critical. Perpandicularity, parallelism and flatness of these features need to be maintained to the best extent possible.
14. All attempts shall be made to ensure that cavity depths and channel widths are not taper.
15. UNC 4-40 thread is to be made during wave guide flange face machining (in assembled condition)

PART No.	DESCRIPTION	SIZE / REF.	MATERIAL	No. OFF	REMARKS
2	MIXER_TOP	REFER DRG. MMDD-TDP-230MIX-AL-P MT-01	Al6061 T651	-	A=33.3 cm^2

DEVIATION FOR NON TOLERENCED DIMENSIONS [ISI : 2102 MEDIUM]

DIAMETERS & LENGTHS UPTO & INCL.		LENGTH IN MM OF SHORTER SIDE OF ANGLE UPTO & INCL.	
6	± 0.1	1 - 6	± 1' - 00'
30	± 0.2	6 - 30	± 0' - 30'
120	± 0.3	30 - 120	± 1' - 20'
315	± 0.5	120 - 400	± 0' - 10'
1000	± 0.8		
2000	± 1.2		
4000	± 2.0		
& ABOVE	± 3.0		

MACHINING FINISH IN MICRONS
▽ 8 - 25 ▽▽ 1.6 - 8
▽▽▽ 0.025 - 1.6 ▽▽▽▽ < 0.025

DO NOT SCALE THE DRAWING UNLESS OTHERWISE STATED DIMENSIONS ARE IN MM REMOVE SHARP CORNERS

DGN.	AAYUSH	
DRN.	PRAVIN	31/05/24
DRG. CHD	ASHISH	
APD.	UBD	
A1	SIGN	DATE

TITLE
TDP MIXER TOP

GOVERNMENT OF INDIA DEPARTMENT OF SPACE
SPACE APPLICATIONS CENTRE
AHMEDABAD-15

SCALE NTS
DRG. NO. MMDD-TDP-230MIX-AL-TOP-01

TOTAL REQD.
WT. IN KGS. N/A
PROJECT **TDP**
SHEET 01
OF 01

THIS DRAWING AND SPECIFICATIONS ARE THE PROPERTY OF THE SPACE APPLICATIONS CENTRE DEPARTMENT OF SPACE GOVERNMENT OF INDIA, AHMEDABAD AND SHALL NOT BE REPRODUCED OR COPIED OR USED AS THE BASE FOR THE MANUFACTURE OR SALE OF APPARATUS OR DEVICES WITHOUT PRIOR PERMISSION.