SRQA LPSC		CC RELEASE	
CHD.		CHD.	
APPD.		APPD.	

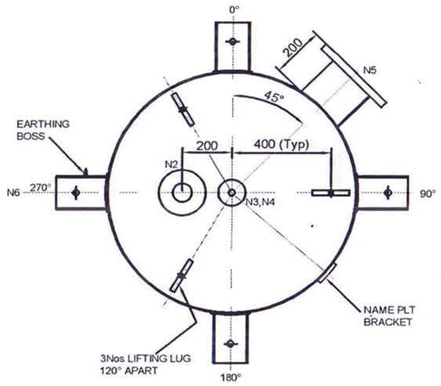

PLAN VIEW

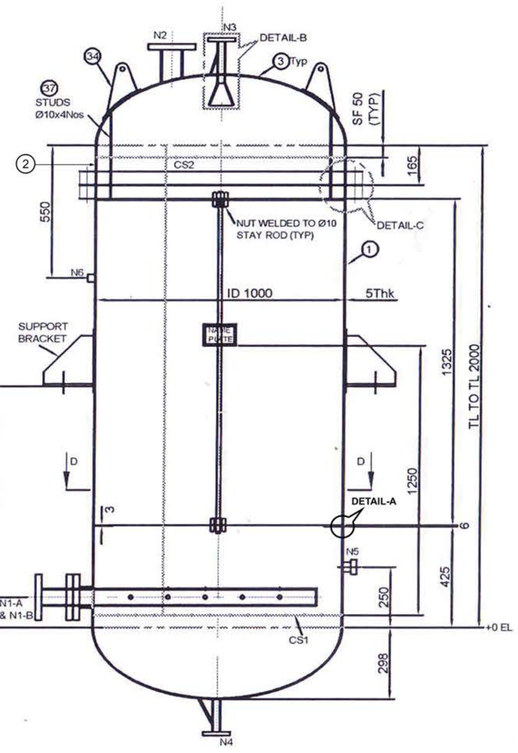

ELEVATION VIEW

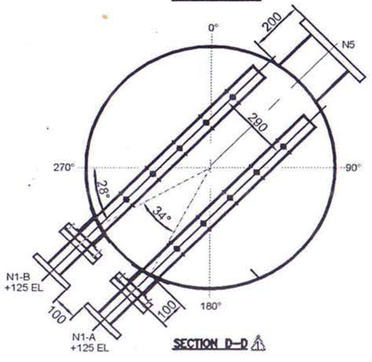

SECTION D-D

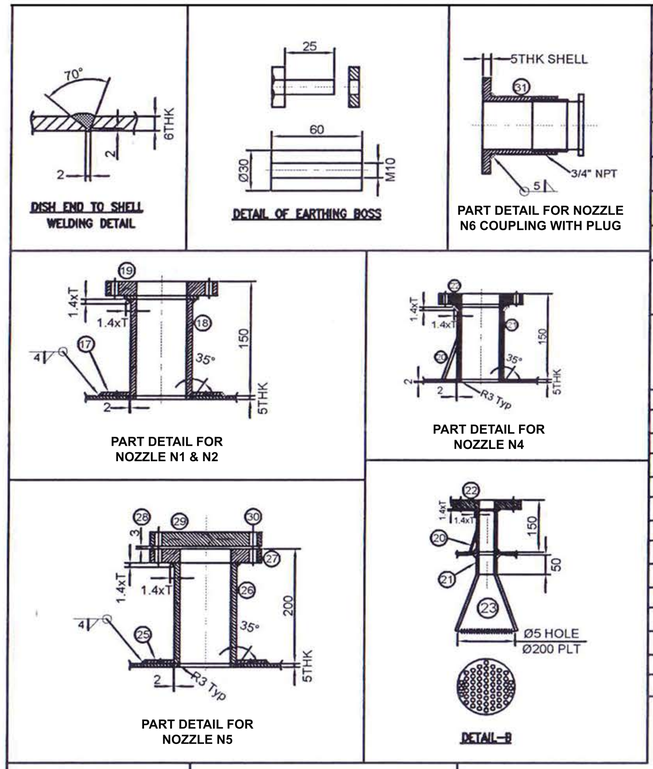

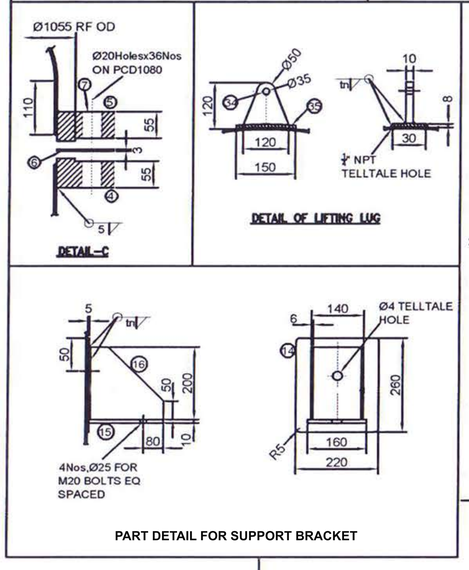

TANK NOZZLE SCHEDULE

NOZZLE	NO OF Qnty	SIZE/Sch	SERVICE	PROJECTION	FLG Std
N1A & N1B	2	80NB/Sch40	GAS INLET	100mm	ANSI B16.5 CL150 SWRF
N2	1	80NB/Sch40	GAS OUTLET	150mm	ANSI B16.5 CL150 SWRF
N3	1	25NB/Sch40	LIQUID INLET	150mm	ANSI B16.5 CL150 SWRF
N4	1	25NB/Sch40	LIQUID OUTLET	150mm	ANSI B16.5 CL150 SWRF
N5	1	200NB/ Sch20S	HANDLE HOLE	200mm	ANSI B16.5 CL150 SORF
N6	1	¾" NPT(F) x3000#	RIGID STEAM THERMOMETER		¾" NPT(F) CPLG WITH PLUG

DESIGN DATA

DESIGN & CONSTRUCTION CODE	ASME SEC VII DIV-1
QUANTITY	2 Nos
FLUID HANDLED	MMH/N204
CAPACITY (m^3)	--
DESIGN PRESSURE (kg/cm^2)	5.2
DESIGN TEMP(°C)	100
OPERATING PRESSURE (kg/cm^2)	ATM
OPERATING TEMP(°C)	60° TO 70°
CORROSION ALLOWANCE (mm)	1.5
RADIOGRAPHY	100%
JOINT EFFICIENCY	1
HEAT TREATMENT	STRESS RELIEVING OF DISHED END
HYDRO TEST PRESSURE(kg/cm^2 g)	7.83 kg/cm^2 g
INSPECTED BY	LPSC ENGINEERS

BILL OF MATERIALS

NO	Qnty	DESCRIPTION	DIMENSIONS	MATERIAL
1	1	BOTTOM SHELL PLT	5mm THK x 1000 ID x 1780 mm HT	SA 240 Gr.304L
2	1	TOP SHELL PLT	5mm THK x 1000 ID x 110 mm HT	SA 240 Gr.304L
3	2	DISHED END	6mm THK x 1000 ID	SA 240 Gr.304L
4	1	BOTTOM SHELL BODY FLG	55 THK x 1013 ID x 1140 OD	SA 240 Gr.304L
5	1	TOP SHELL BODY FLG	55 THK x 1013 ID x 1140 OD	SA 240 Gr.304L
6	1	GASKET	3mm THK x OD 1050, ID 1015mm	SS 304L
7	36	STUDS & NUTS	M18 x 220mm LG	SA193 Gr.B8/SA194 Gr.8
8	1	INNER RING	6mm THK x OD 996, ID 800mm	SA 240 Gr.304
9	2	PERFORATED SHEET	Ø5 HOLE, 3mm THK x OD 980 mm	SS 304
10	4	STAY ROD	Ø 10, 1425 mm LG	SA 312 TP304L
11	2	NOZZLE INNER PIPE - N1	65 NB Sch 40 x 1180Lg	SA 312 TP304L
12	4	NOZZLE FLANGE - N1	80 NB, BLIND 150 # (DRILL TO SUIT 65NB PIPE)	SA 182 F304L
13	16	NUTS FOR STAYRODS	TO SUIT Ø10	SA193 Gr.B8/SA194 Gr.8
14	4	PAD PLT FOR BRACKET	5mm THK x 260 x 220mm	SA 240 Gr.304L
15	4	BRACKET BASE PLT	10mm THK x 160 x 160mm	SA 240 Gr.304L
16	8	BRACKET GUSSET PLT	6mm THK x 160 x 200mm	SS 304
17	3	PAD PLATE - N1,N2	5mm THK x 90 ID x 160 OD	SA 240 Gr.304L
18	3	NOZZLE PIPE - N1,N2	80 NB Sch 40	SA 312 TP304L
19	3	NOZZLE FLANGE - N1,N2	80 NB, SWRF 150 #	SA 182 F304L
20	2	STIFFENER PLT - N3,N4	5mm THK	SA 240 Gr.304
21	2	NOZZLE PIPE - N3,N4	25 NB Sch 80	SA 312 TP304L
22	2	NOZZLE FLANGE - N3,N4	25 NB, SWRF 150#	SA 182 F304L
23	1	CONE FOR N3 NOZZLE	3 THK x 200 DIA/33 DIA x 100 HT	SA 240 Gr.304L
24	1	PLATE FOR N3 NOZZLE CONE	3 THK x 200mm DIA (PERFORATED SHEET)	SA 240 Gr.304L
25	1	PAD PLT - N5	5mm THK x 350 OD x 220 ID	SA 240 Gr.304L
26	1	NOZZLE PIPE - N5 (SMLS)	200 NB Sch 20S	SA 312 TP304L
27	1	NOZZLE FLANGE - N5	200 NB, SORF 150#	SA 182 F304L
28	1	GASKET - N5	TO SUIT 200 NB FLANGE	TEFLON
29	1	BLIND FLANGE - N5	200 NB, BLRF 150#	SA 182 F304L
30	8	BOLTS & NUTS - N5	M20 x 90 LG	SA193 Gr.B8/SA194 Gr.8
31	1	COUPLING WITH PLUG N6	3/4" NPT(F), 3000#	SA 182 F304L
32	1	NAME PLATE BRACKET	3mm THK x 300 x 150	SA 240 Gr.304L
33	1	NAME PLATE	150mm x 230mm	SS 304
34	3	LIFTING LUG	10 THK x 120 x 120mm	SA 240 Gr.304L
35	3	LIFTING LUG PAD	8 THK x 150 x 30mm	SA 240 Gr.304L
36	1	EARTHING BOSS	Ø30 x 60 LG	SS 304L
37	4	STRUTS	Ø10 x TO SUIT	SS 304
38	2	HANDLE	Ø8 x 300 LG	SS 304
39	2	PIPE END COVER	5Thk x 73 Dia	SS 304
40	2	GASKET	TO SUIT 80 NB FLANGE	TEFLON

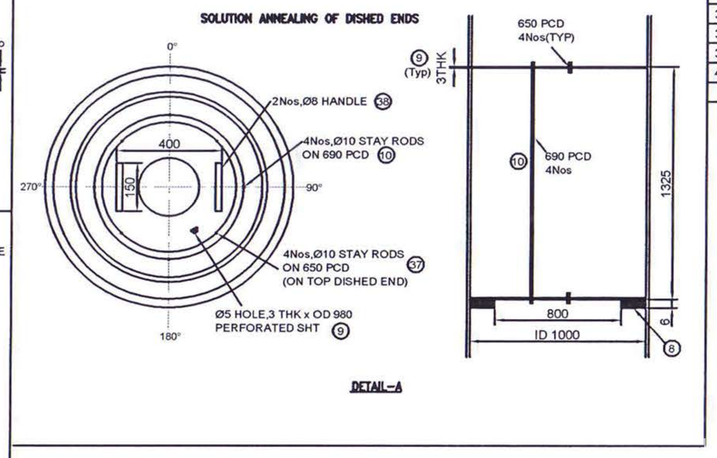

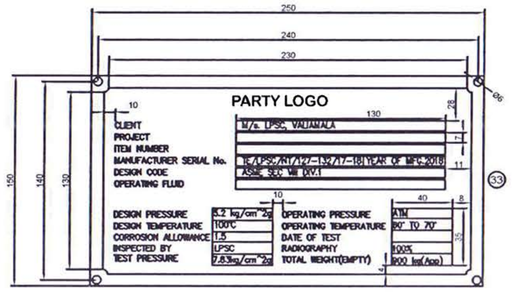

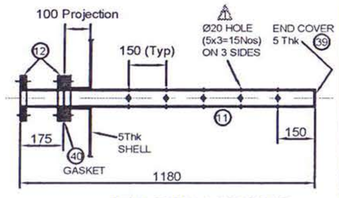

DETAIL OF N1A & N1B NOZZLE

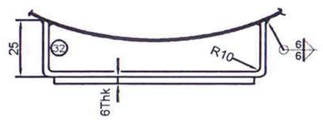

DETAIL OF NAME PLATE

MACHINING FINISH IN MICRONS		
~	-	>25
▽	-	25-8
▽▽	-	8-1.6
▽▽▽	-	1.6-0.025
▽▽▽▽	-	<0.025

IS : 2102 MEDIUM GRADE

DIA & LENGTH UP TO & INCL.		LENGTH IN mm SHORTER SIDE OF ANGLE UP TO & INCL.	
6mm	±0.1	1-6	±1°.00'
6-30	±0.2	6-30	±0°.30'
30-120	±0.3	30-120	±0°.20'
120-315	±0.5	120-400	±0°.10'
315-1000	±0.8		
1000-2000	±1.2		
2000-4000	±2.0		
4000&ABOVE	±3.0		

DO NOT SCALE THE DRAWING
ASK IF IN DOUBT.
UNLESS OTHERWISE SHOWN
ALL DIMENSIONS ARE IN mm.

Concentricity
Perpendicularity
Angularity
Parallelism

MATERIAL
Mechanical properties

General tolerance
Thread tolerance
Thread chamfer & under cut.
Radii not specified
Chamfers not specified

SURFACE TREATMENT

SURFACE FINISH

QUANTITY

MARKING

MASS
Kg

This drawing is the exclusive property of ISRO and shall not be copied, reproduced or communicated to others without proper authorisation.

NO.OF ASSY.	QTY.	NEXT ASSEMBLY

ECP. NO. DATE

TITLE
FABRICATION DRAWINGS FOR PROPELLANT VAPOUR NEUTRALIZATION SCRUBBER

DGN.	J Ranch	09/09/2024
D.CHD.	[illegible]	12/09/2024
DRN.	J Ranch	20/09/2024
CHD.	[illegible]	24/09/2024
APPD.	[illegible]	22/10/2024
	SIGN.	DATE

GOVERNMENT OF INDIA
INDIAN SPACE RESEARCH ORGANISATION
LIQUID PROPULSION SYSTEMS CENTRE
VALIAMALA TRIVANDRUM-695547

DRG.No. TE/LPSC/ESES/SCSTD/PVNS

SCALE NTS

SHEET 1 OF 1

FORMAT A1

INDEX	MODIFICATION ORDER No. & DATE

PROJECT ESES/ESEG

REV. NO. 01